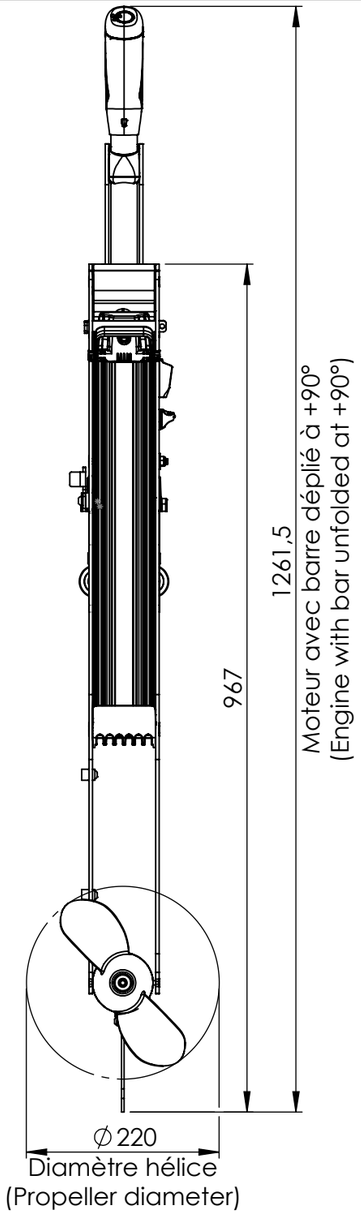


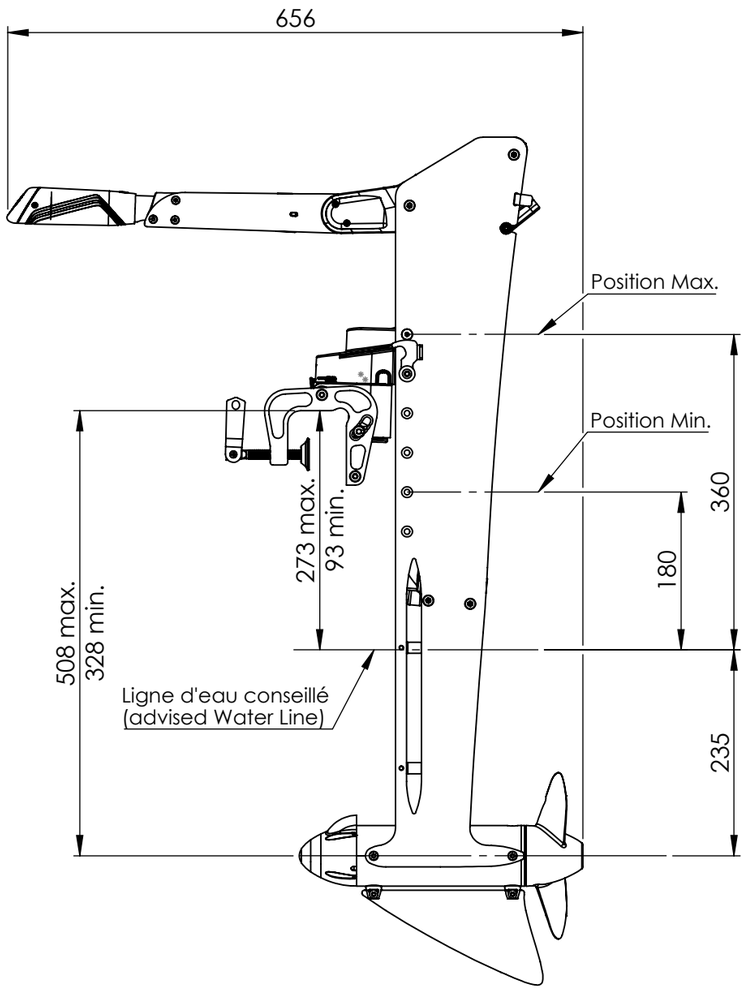


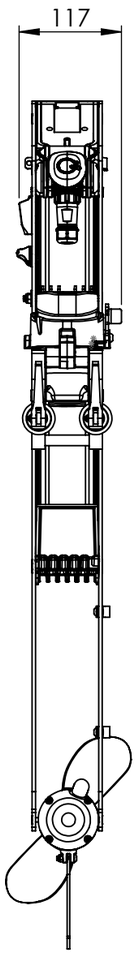


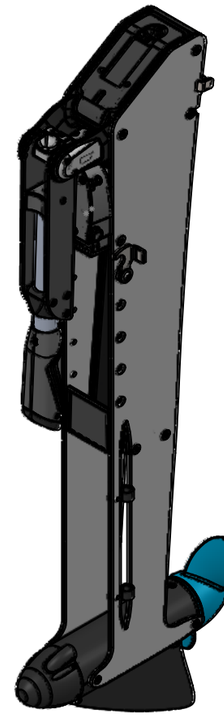






| | | | |
|---|---|---|---|
| A | 23/10/2026 | | |
| REV. | DATE | DESCRIPTION | |
| A3 | General Tolerance: - | General roughness: | TEMO France Tel: (+33)2 85 52 26 42 Reproduction et diffusion interdites sans autorisation |
| | Material: | | |
| Mass:8632.63 g | Finishing: | | |
| Part / Assembly: Propulseur T700 assemblé | | Scale: 1:7 | Folio: 1 of 1 |
| PROJECT: T700 | | DWG. NO: TAS_016 | Rev. A |