

ENG

TEMO

SEASIDE 3 KW

OUTPOD™, FIXED & STEERABLE POD
QUICK GUIDE

Read before first installation and use

Find all our templates, videos, and complete manuals on our website:
temofrance.com/pages/documentation-center



Register your motor to extend your warranty

TEMO FRANCE
www.temofrance.com

1. PACKAGE CONTENT

Contents of the delivery:

1. 1x Quick guide
2. 1x 2 magnetic keys with floating wrist strap

Display box:
2. 1x Display 1˝

Control box:
4. 1x Throttle
5. 1x Nut
6. 1x Flat gasket

MCU box:
7. 1x MCU (Motor Control Unit)
8. 1x Display wiring harness
9. 1x Throttle wiring harness



1

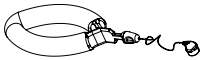
2



3


4


5


6


7

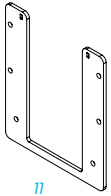
11


12

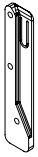
13

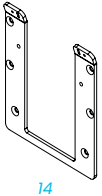
14


15

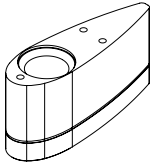
17


18


19


20


21

OUTPOD·3000 VERSION

10. 1x Motor 3 kW OUTPOD™

Sliding transom fitting box:
11. 1x Piece A
12. 1x Piece B
13. 1x Piece C
14. 1x Piece D
15. 2x Butterfly screws

POD·3000 - FIXED VERSION

16. 1x Fixed motor 3 kW

Hull interface box:
17. 1x Hull interface
18. 2x ø50 mm O-ring
19. 1x Rudder tube washer
20. 2x Rudder tube spacer
21. 2x Nut 1" ½
22. 3x Screw M8x160 mm
23. 3x ø6 mm O-ring
24. 3x ø8 mm Flat washer
25. 3x M8 Lock nut
26. 1x Screw M6x20 mm

POD·3000 - STEERABLE VERSION

27. 1x Steerable motor 3 kW

Steering tube box:
28. 1x Steering tube
29. 1x Upper bearing
30. 1x Lower bearing
31. 1x Connecting rod
32. 1x Nut 1" ½
33. 1x Space
34. 4x Countersunk screw M5x16 mm
35. 4x Set screw M6x12 mm


22


23


24


25


26

31


28


29

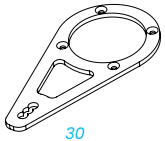
30


32

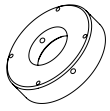
33


34


35

Numbers: 10, 16, 27 →

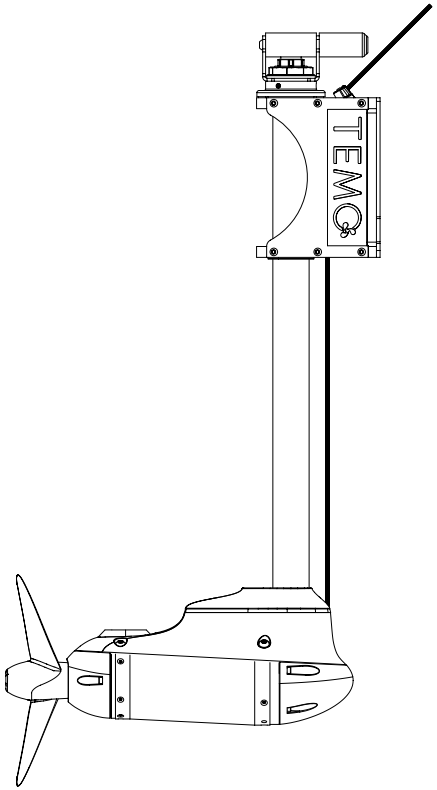

10

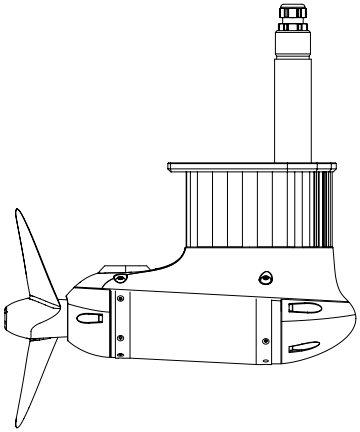

16

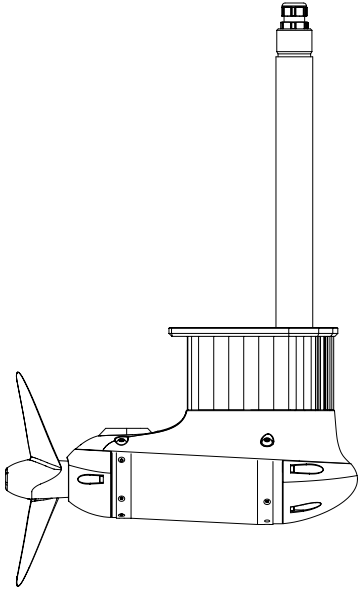

27

2. OPTIONS LIST

TEMO battery:
1. 1x Rackable battery

Autoconnect rack:
2. 1x Autoconnect rack
Different rack version if two racks are installed (main battery and secondary battery).

Stationary battery:
3. 1x Stationary battery
4. 1x User manual

TEMO battery cable kit:
5. 2x MIDI-MEGA fuse holder
6. 2x MIDI 80 A fuse
7. 1x MEGA 80 A fuse
8. 2x BusBar
9. 2x Circuit breakers
10. 1x Positive battery cable with connector
11. 1x Positive battery cable with terminals
12. 1x Negative battery cable with connector
13. 1x Negative battery cable with terminals
14. 1x Battery signal wiring harness

Noname battery cable kit:
15. 1x MIDI fuse holder
16. 1x MIDI 80 A fuse
17. 2x Circuit breakers
18. 1x Positive battery cable with connector
19. 2x Positive battery cable with terminals
20. 1x Negative battery cable with terminals
21. 1x Negative battery cable with terminals

TEMO home battery charger:
22. 1x Docking station
23. 1x Charger

On-board charger:
24. 1x Power cable with mains plug
25. 1x Charger

Folding propeller:
26. 1x Pre-assembled propeller
27. 1x Screw M6x12
28. 1x Ø6 Washer
29. 1x Pin

4. INSTALLATION PREREQUISITES

Normative reminder:
The installation of the propulsion system must comply with the requirements of the applicable harmonized standards and the following standards:
> EN ISO 16315:2016
> EN ISO 13297:2021
> EN ISO 8846:2017
> ISO/TS 23625:2021

- The battery compartments must be ventilated in accordance with the battery manufacturer's recommendations, taking into account the following requirements:

> The air intake of the battery compartments or battery containers must be located below the level of the battery, and the air outlet must be installed at the highest point of the compartment or container and must discharge directly to the open air with bends not exceeding 45°.

> If natural ventilation is not possible or is insufficient, mechanical ventilation must be installed. When mechanical ventilation is used, the charging circuit(s) must be interlocked so as to stop charging if the ventilation system fails. An alarm must be triggered at the helm station in the event of a mechanical ventilation fault.

> Cable entries into battery compartments must be gas-tight.

- All electrical equipment located in the same vicinity as an accumulator battery, battery pack, or battery bank capable of emitting gases or flammable substances must be protected against ignition in accordance with ISO 8846 or the IEC 60079 series.
- It should be noted that propulsion battery packs may be installed in a low location within a boat's hull due to their effect on stability. In the event of a fault in LPG systems or leaks of other flammable gases that may accumulate in the lower parts of the hull, special precautions must be taken to ensure that the operation of a battery disconnect switch or any other isolation device does not become an ignition source.

Electrical equipment intended for use in explosive gas atmospheres, or installed in locations where flammable gases, vapours, or explosive dusts may accumulate—such as spaces containing gasoline engines or fuel tanks, fittings or other components of a fuel system, as well as compartments or lockers containing LPG cylinders and/or pressure regulators—shall comply with ISO 8846, ISO 10239, ISO 11105 and ISO 9094, or the IEC 60079 series.

- A protective device against overcurrent and a battery disconnect switch are required for each propulsion battery pack or battery bank.
- Accumulator batteries must be securely fastened to prevent movement and tilting occurring during the use of the boat, and must be protected against falling objects. As installed on the boat, accumulator batteries must withstand inclinations of up to 30° without electrolyte leakage. For monohull sailing boats, a containment system must be provided to retain any electrolyte leakage up to an inclination of 45°.
- Accumulator batteries must be installed above the foreseeable bilge water level.
- Except for sealed types, when accumulator batteries are installed in an motors room, drip trays or containers resistant to the effects of electrolyte must be installed.
- Accumulator batteries must not be installed directly above or below a fuel tank or fuel filter, and any other metallic component of the fuel system located within 300 mm above the top of the battery must be electrically insulated.
- Each accumulator battery pack or bank must be capable of being disconnected from the d.c. system circuits by a manually operated battery disconnect switch that is immediately accessible and located in the immediate vicinity of the battery compartment. The disconnect switch must be installed as close as possible to the battery output terminals and no more than 1.8 m away, measured along the conductors.
- The battery disconnect switches must isolate both poles.
- All electrical equipment located in the same vicinity as an accumulator battery, battery pack, or battery bank that may emit gases or flammable substances must be protected against ignition in accordance with ISO 8846 or the IEC 60079 series.
- Each fuse or circuit breaker installed at the source of a circuit must be designed to protect the conductor of the protected circuit with the smallest cross-section.
- Switches (disconnect switches) must not require the use of tools for operation, and manual control devices must be immediately accessible from outside the battery pack or its compartment. Switches (disconnect switches) must be fitted with a locking device in the OFF position.
- Electrical equipment enclosures must be mechanically strong and rigid, and installed so that the equipment is not affected by deformation, vibration, or movement of the boat structure occurring during normal operation.
- Access to enclosures or compartments containing live parts of the electrical system must require the use of hand tools or provide a minimum ingress protection rating of IP2X.
- If the installation includes multiple independent systems, displays should be

located close to one another in order to centralize information.

- If the installation includes multiple independent systems, displays should be located close to one another in order to centralize information.
- Accessible parts must be maintained in order to reduce the risk of insulation failure.
- Propulsion system conductors must be installed in conduits or trunking, on dedicated cable routes, or using clamps or other direct fixing methods on surfaces in accordance with IEC 60092-352. See also ISO 10133 and ISO 13297.
- Propulsion system electrical circuits must be physically separated from other electrical circuits on the boat by being:

a) installed in separately routed conduits or cable trunking; or
b) installed on a tray or ladder system where physical separation is ensured by a partition; or
c) directly fixed to a surface and separated by at least 100 mm from other circuits.

- Components, conductors, and equipment forming part of the electric propulsion system must be installed above the maximum possible bilge water level, taking into account the boat's heel and trim conditions.
- Upon completion of the installation of the electric propulsion system and prior to commissioning of the boat, the entire electric propulsion system must be tested. These tests are intended to indicate the general condition of the system after installation; however, satisfactory test results are not necessarily sufficient to guarantee that the installation is fully satisfactory in all respects.
- The electric propulsion system must be load-tested at a power level as close as possible to its rated operating load in order to ensure that there is no overheating caused by poor connections or incorrect rated values. Switches, circuit breakers, and control devices must be operated under load in order to test their suitability and to demonstrate that the operation of the overcurrent, undervoltage, reverse current, or reverse voltage protection devices is electrically and mechanically satisfactory.
- In the event of a failure of the electric propulsion control system, a manual emergency control mode or equivalent device must be installed to enable the vessel to reach a place of refuge in accordance with the SOLAS Convention.

Note: Please refer to the third-party battery user manual recommendations if your installation includes such a battery.

CHECKS & INSPECTIONS PRIOR TO INSTALLATION

> Absence of abnormal play
> Number of delivered parts
> General condition of the parts
> Mechanical integrity of the supporting structure (hull/support), which must be sufficient to withstand the loads induced by the installation of the propulsion system

COMPONENTS	PROTECTION CLASS
Motors OUTPOD·3000, POD·3000 FIXED & STEERABLE	IP68
MCU	IP65
Battery rack	IP54
TEMO battery	IP67
Display	IP67
Throttle	IP67
Bridge	IP66

5. ELECTRICAL SCHEMATICS

Standard electrical wiring diagram with TEMO batteries.
Other electrical wiring diagrams are available on the website www.temofrance.com

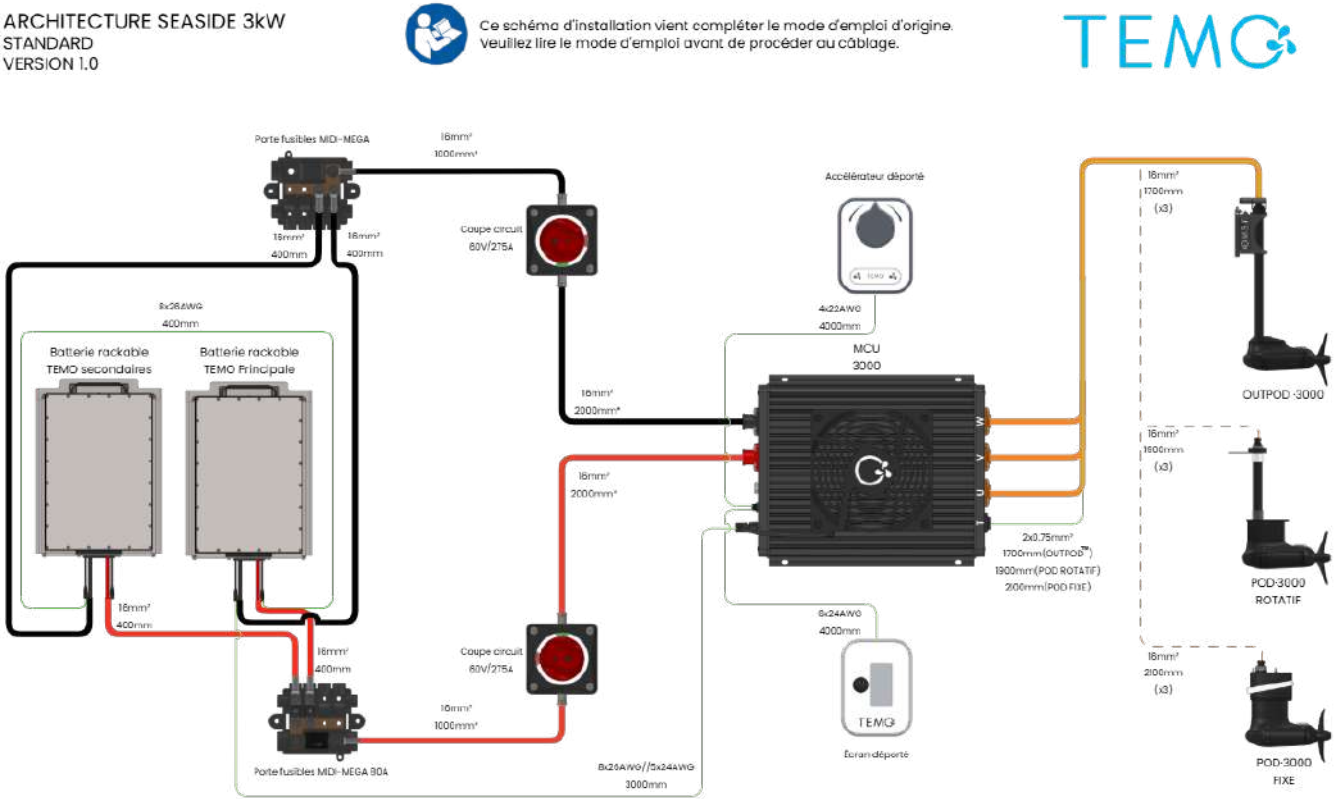

6. ELECTRICAL INSTALLATION

LIST OF COMPATIBLE BATTERIES & OPERATING VOLTAGE/CURRENT RANGE:
> The system can be powered by multiple batteries connected in parallel, provided that the battery manufacturer's recommendations for parallel connection are followed.
> The use of multiple batteries connected in series is strictly prohibited.

VOLTAGE RANGES:
-NMC -> 13-14S.
-LFP -> 15-16S.
Maximum permissible operating voltage -> 59 V.
Minimum permissible operating voltage -> 40 V.
Maximum continuous discharge current -> 80 A.

PRE-POWER-ON CHECKS:
- Polarity verified between the battery(ies) and the MCU.
- Cables properly secured, protected against abrasion and sharp edges.
- Fuses installed.
- Main circuit breakers open (if present).
- Continuity:
  ground as per electrical schematics
  +48 V as per electrical schematics
- No short circuit between ground and +48 V.

FIRST POWER-ON CHECKS:
- Motors throttle in neutral position.
- Circuit breakers and/or batteries accessible.
- No one near the propeller.
- No signs of overheating in the installation when idle (no load).
- No abnormal smell indicating overheating, early combustion, or electrical component failure.
- Magnetic key on the propeller in the "disabled" position.

In the event of a failure, immediately cut the system's main power supply (by removing the battery or switching off the circuit breakers).

7. GENERAL INSTALLATION

MCU (MOTOR CONTROL UNIT) :
Tools and materials not included and required for installation:
- Screwdriver
- 4x ø4 mm A2 stainless steel screw

1. Define the location of the MCU and ensure that the cable lengths are sufficient to interconnect the various subassemblies.
2. Securely mount the MCU using the four available mounting holes.
Note: The MCU must not be installed with the fan facing downward. The screw diameter must be less than or equal to ø4 mm.
3. Connect the + and – battery cables to the connector, ensuring correct polarity. The connectors lock into place (click) when fully inserted.
Note: The connectors are equipped with a release button. *(a)*
4. Connect the motor power connectors, ensuring correct polarity of phases U/V/W. *(1)*
5. Connect the motor temperature connector (T), ensuring correct alignment of the keying feature, then turn the bayonet lock until it reaches the end stop. *(2)*
6. Connect the battery, display, and throttle signal connectors, ensuring correct alignment of the keying feature. Refer to diagrams *3* and *4* for the display and throttle.
7. Tighten the connector nut by hand.

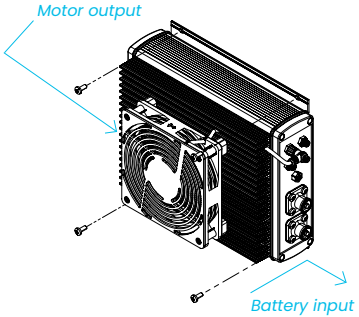

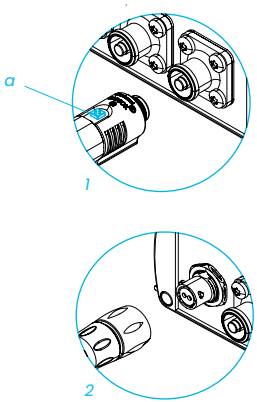

DISPLAY :

Tools and materials not included and required for installation:

- PU glue
- Jigsaw

1. Position the screen drilling template (template available on www.temofrance.com/pages/doc-center).
2. Cut the mounting support according to the drilling template.
3. Bond the screen using PU glue.
4. Connect the display to the MCU, ensuring correct alignment of the keying. *(3)*
5. Hand-tighten the connector nut.

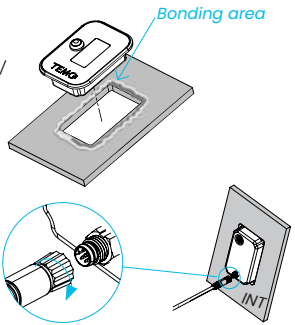

THROTTLE :

A default direction of rotation is applied; a reverse option can be selected prior to workshop dispatch, see Chapter 8 Throttle & Display.

Tools and materials not included and required for installation:

- PU glue
- Drill
- ø50 mm Hole saw
- Universal spanner
- ø5 mm Drill bit

1. Position the throttle drilling template.
2. Drill a ø5 mm hole for the anti-rotation pin seat.*(a)*
3. Drill a ø50 mm hole using a hole saw through the structure.
4. Install the throttle and tighten the plastic nut, ensuring the throttle is bonded using PU glue.
5. Connect the throttle to the MCU, ensuring correct alignment of the keying. *(4)*
6. Hand-tighten the connector nut.

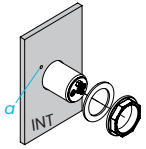

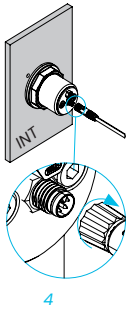

1. MOTOR OUTPOD·3000 VERSION:

SLIDING TRANSOM FITTING:

Tools and materials not included and required for installation:

- ø8 mm Drill bit
- 6 ø8 mm A2 stainless steel countersunk head screw

1. Position the sliding transom fitting template, ensuring it is level (template available on www.temofrance.com/pages/doc-center).
2. Drill a 8 mm hole to the depth corresponding to the fixing method appropriate for the boat's structure. The specified fasteners must be 90° countersunk head screws.
3. Securely fasten the sliding base structure, following the sequence below:
a- Piece A *b-* Piece B *c-* Piece C *d-*Piece D.
4. Tighten the two butterfly screws.

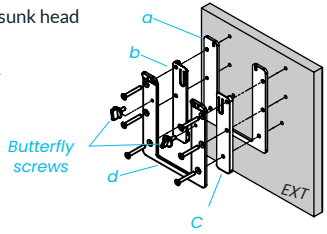

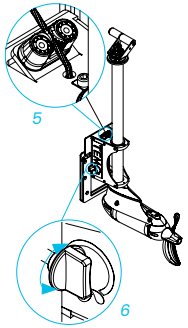

MOTOR OUTPOD·3000 VERSION:

1. Place the motor support in the lower position and lock it using the cleat. *(5)*
2. Partially loosen the wing screws on the slide. *(6)*
3. Align the motors support with the groove of the slide and guide the assembly down to the lower stop.
4. Hand-tighten the wing screws on the slide to lock the motors in position. *(6)*
5. Check that there is no play.
6. Connect the three motor phases and the temperature sensor, ensuring correct alignment of the keying feature.

2. MOTOR POD·3000 - FIXED VERSION:

The end of the «rudder tube» must be above the boat's waterline.

HULL INTERFACE:

Tools and materials not included and required for installation:

- ø8 mm Drill bit
- Universal spanner
- Saw
- Hole saw from ø50 mm to ø55 mm
- PU glue
- Socket wrench
- ø13 mm Socket

1. Position the drilling template for the interface, ensuring it is aligned with the boat's axis (template available on www.temofrance.com/pages/doc-center).
2. Drill through the structure using a ø8 mm drill bit, following the template.
3. Drill through the structure using a hole saw from ø50 mm to ø55 mm, following the template.
4. Position the hull interface and determine the required cutting angle to position the propeller shaft horizontally.
5. Cut the hull interface, ensuring you remain within the permitted cutting area.
6. Position the two parts of the hull interface, sandwiching the boat's hull, and ensure the interface is bonded using PU glue.
7. Install the fasteners (supplied with the hull interface) and tighten the entire assembly (17 N·m).

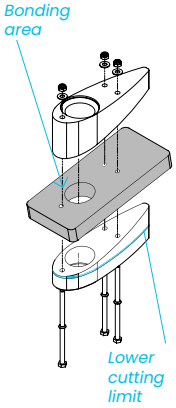

MOTOR POD·3000 - FIXED VERSION:

Tools and materials not included and required for installation:

- Universal spanner
- Adjustable wrench
- T30 Torx key
- PU glue

1. Install a ø50 mm O-ring at the bottom of the rudder tube. *(a)*
2. Position the motors and insert the rudder tube through the hull interface, ensuring the power connector is fed through first.
3. Install in the following order:
a- ø50 O-ring, *b-* Washer, *c-* Spacer(s)*, *d-* Nut 1" ½, *e-* Locknut.
4. Lock in position by hand-tightening.
5. Using an adjustable wrench, tighten the nut (~50 N·m), then the locknut (~50 N.m).
6. Install and tighten the M6 screw located at the rear of the hull interface, ensuring PU glue is applied to the screw (3 N·m).
7. Check for any play.
8. Connect the three motor phases and the temperature sensor, ensuring correct alignment of the keying feature.

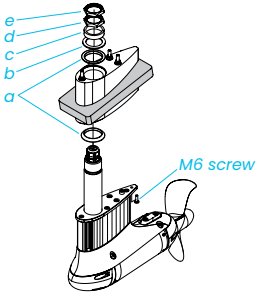

*Depending on the hull thickness.

3. MOTOR POD·3000 - STEERABLE VERSION:

The end of the «rudder tube» must be above the boat's waterline.

STEERING TUBE:

Tools and materials not included and required for installation:

- ø5 mm Drill bit
- ø65 mm Hole saw
- Screwdriver
- 4 ø5 mm A2 stainless steel screws
- 4 ø5 mm Washers
- 4 ø5 mm Nuts
- PU glue
- Soft mallet

1. Position the drilling template for the rudder tube, ensuring it is aligned with the boat's axis.
2. Drill through the structure using a ø5 mm drill bit, following the template.
3. Drill through the structure using a ø65 mm hole saw, following the template (available on www.temofrance.com/pages/doc-center).
4. Insert the rudder tube through the hull, ensuring a bead of PU glue is applied.
5. Install the fasteners and tighten the assembly (5 N.m).
6. Insert the upper and lower bearings inside the rudder tube until the flanges *(a)* are in contact with the tube.

Note: The use of a soft mallet may be necessary.

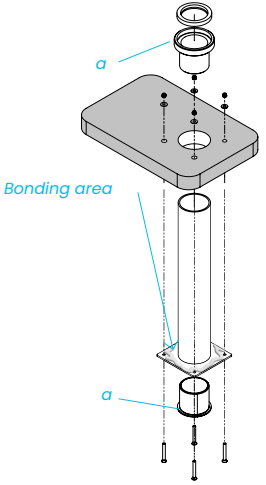

MOTOR POD·1000 - STEERABLE VERSION:

Tools and materials not included and required for installation:

- Adjustable wrench
- 5 mm Allen key

1. Position the connecting rod on the spacer. Insert the fasteners and tighten the assembly (3 N·m). (a)
2. Position the motors and insert the rudder tube through the steering tube, ensuring the power connector is fed through first.
3. Screw the spacer onto the rudder tube until it reaches the stop, then slightly unscrew it to align the connecting rod with your steering system.
4. Lock the rotation of the connecting rod/spacer assembly by tightening the 4 set screws (6 N·m). (b)
5. Place the 1½" nut onto the rudder tube and, using an adjustable wrench, tighten the nut (~50 N·m). (c)
6. Check for any play.
7. Connect the three motor phases and the temperature sensor, ensuring correct alignment of the keying feature.

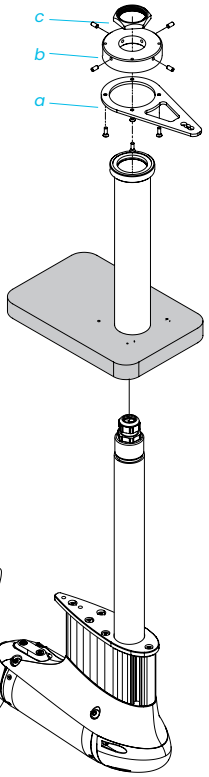

Example of a steering system installed on the connecting rod

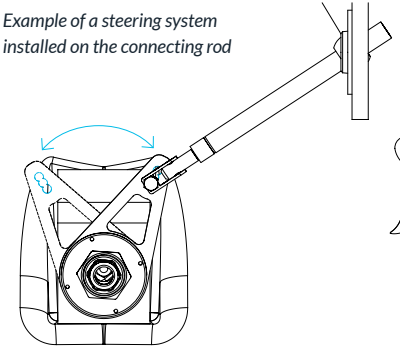

8. INSTALLATION OPTIONS

BATTERY RACK:
Tools and materials not included and required for installation:
- Screwdriver
- 4 ø6 mm A2 stainless steel screws

1. Define the location of the rack, protected from water splashes, and ensure that the cable lengths are sufficient to connect to the fuse holders. The rack must be mounted horizontally or vertically (0° to a maximum of 90°).
2. Securely mount the rack using the four available mounting holes.
Note: The screw head must not exceed the height of the guide rails (h<6mm).
The screw diameter must be less than or equal to ø6 mm.
3. Connect the main battery signal connector to the MCU, ensuring correct alignment of the keying feature. *(7)*
4. Connect the inter-battery signal connector, ensuring correct alignment of the keying feature. *(8)*

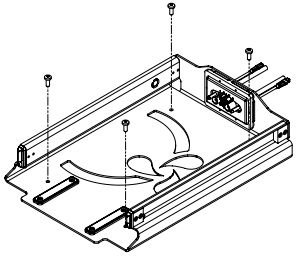

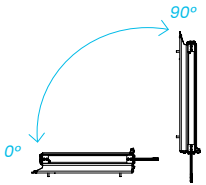

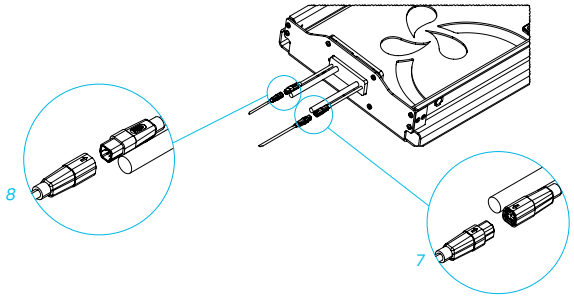

TEMO BATTERY CABLE KIT:
Tools and materials not included and required for installation:
- Screwdriver
- Socket wrench
- ø8 mm Socket
- ø13 mm Socket
- ø17 mm Socket
- 4 ø5 mm A2 stainless steel screws

The SEASIDE 3 kW system is available with an optional complete electrical connection kit.
The electrical connection must be carried out in accordance with the wiring diagram corresponding to your installation (additional wiring diagrams are available at temofrance.com/pages/doc-center).
The installation of the components included in the various kits is described in the following sections (battery switch, fuse holder, power connectors, etc.).

1. Position the fuse holders and securely fasten them using 2 ø5 mm screws per item.
2. Install and tighten (12 N·m) the MEGA 80 A fuse on the +48 V fuse holder, following the sequence below:
a- washers *b-* fuses *c-* terminals *d-* washers *e-* spring washers *f-* nuts.
3. Install and tighten (4 N·m) the MIDI 80 A fuses on the +48 V fuse holder, following the sequence below:
a- washers *b-* fuses *c-* terminals *d-* washers *e-* spring washers *f-* nuts.

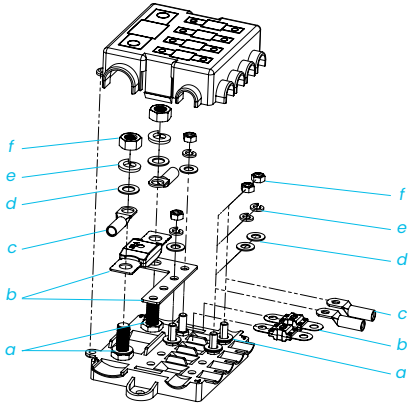

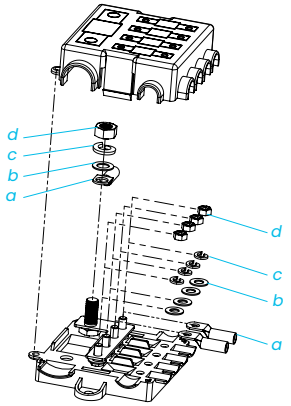

4. Install and tighten (12 N·m) the M8 terminal on the negative battery fuse holder in the following order:
a- terminals *b-* washers *c-* spring washers *d-* nuts
5. Install and tighten (4 N·m) the M5 terminal on the same negative battery fuse holder in the following order:
a- terminals *b-* washers *c-* spring washers *d-* nuts

6. Define the locations of the circuit breakers and ensure that the cable length is sufficient to interconnect the different subassemblies.
7. Remove the snap-in windows, ensuring that the upper window is not removed in order to limit water ingress.
8. Install and tighten (10 N·m) the terminals in the following order:
a- terminal *b-* spring washer *c-* nut.
9. Position the circuit breaker drilling template.
10. Secure the circuit breakers using the included fasteners if your mounting surface is compatible.
Note: The circuit breakers can be locked out by removing the rotary knob.

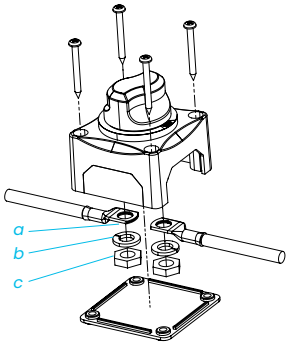

THIRD-PARTNER BATTERY CABLE KIT:
Tools and materials not included and required for installation:
- Screwdriver
- Socket wrench
- ø8 mm Socket
- ø17 mm Socket
- 4 ø4 mm A2 Stainless steel screws

1. Define the battery location and ensure that the cable length is sufficient to interconnect the different subassemblies.
2. Secure the battery firmly in accordance with the manufacturer's recommendations.
3. Install and tighten the terminal using suitable fasteners. *(9)*
Note: Batteries must be installed in accordance with the manufacturer's recommendations, in particular by observing:
- Battery orientation and secure mounting.
- The temperature and humidity range of the compartment.
- Ventilation of the compartment.

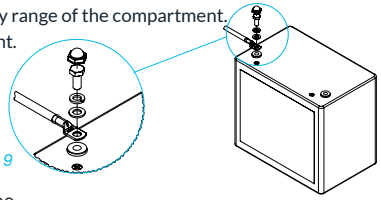

4. Install and tighten (4 N·m) the 80 A fuse ont the +48 V fuse holder in the following order:
a- washers *b-* fuse *c-* terminals *d-* washers *e-* spring washers *f-* nuts.
5. Install and tighten (4 N·m) the BusBar onto the negative battery fuse holder, in the following order:
a- washers *b-* BusBar *c-* terminals *d-* washers *e-* spring washers *f-* nuts (parts available in the miscellaneous box).

4. Fuse *5. BusBar*

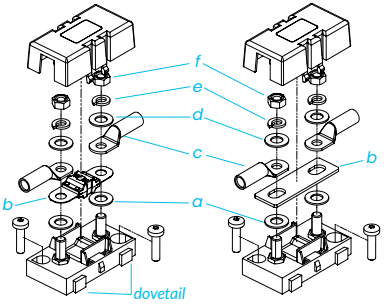

6. Install the circuit breakers (see steps 6–10 in the installation of the TEMO battery cable kit).

9. OPERATION

START-UP PROCEDURE:

1.

Version 1 - Rackable TEMO battery:
> Insert the battery in the rack.
> Lock the battery.

Version 2 - Stationary battery:
> Switch off the circuit breakers, starting with the +48 V.

2. Check that the motors throttle is in neutral and that the magnetic key is not set to “propeller enabled” (see chapter 8 Throttle & display).
3. Press the start button on the display.
4. The display initializes after 5 seconds.
5. Set the magnetic key to “propeller enabled.”
6. You are ready to operate.

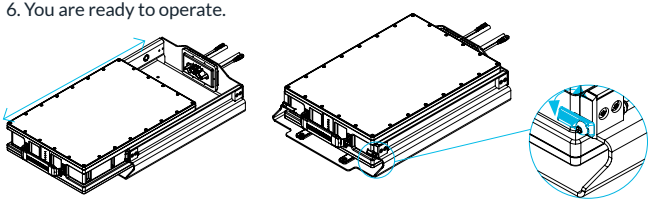

SYSTEM SHUTDOWN PROCEDURE:

1. Check that the motors throttle is in neutral and that the magnetic key is not set to “propeller enabled.”
2. Press the start button on the display.
3. The display initializes after 5 seconds.
4. Close the circuit breakers, starting with the +48 V.

Version 1 - Rackable TEMO battery:
> Unlock the battery.
> Remove the battery from the rack.
Note: the TEMO battery can be left in place in the rack.

Version 2 - Stationary battery:
> Shut down the system by opening the circuit breakers, starting with the negative battery (-BAT).

SYSTEM CHARGING PROCEDURE:

Version 1 - TEMO rack-mounted home battery charger:
1. Connect the home charging station to the charger, ensuring correct alignment of the keying feature on the connector.
2. Place the battery on the charging station, ensuring correct alignment of the keying feature when positioning the battery.
3. Connect the charger to the mains power supply.
4. After initialization (5 seconds), the charger indicates the battery charge level with an orange LED.
5. When the desired charge level is reached:
> Disconnect the charger from the mains power supply.
> Remove the battery from the charging station.

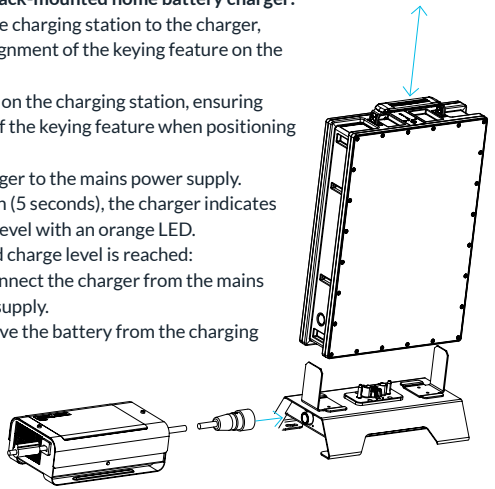

Version 2 - TEMO onboard charger + stationary battery:
1. Check that the battery is locked in the rack.
2. Close the circuit breakers.
3. Connect the onboard charger to the mains power supply; the “AC” indicator lights up blue.
4. After initialization (20 seconds), the “charge” indicator flashes green.
5. When the desired charge level is reached:
> Disconnect the charger from the mains power supply.
> Open the circuit breakers.

Note: Before any navigation, ensure that the onboard charger is not connected to shore power.
Note: For further information, please refer to the onboard charger detailed manual.

10. THROTTLE & DISPLAY

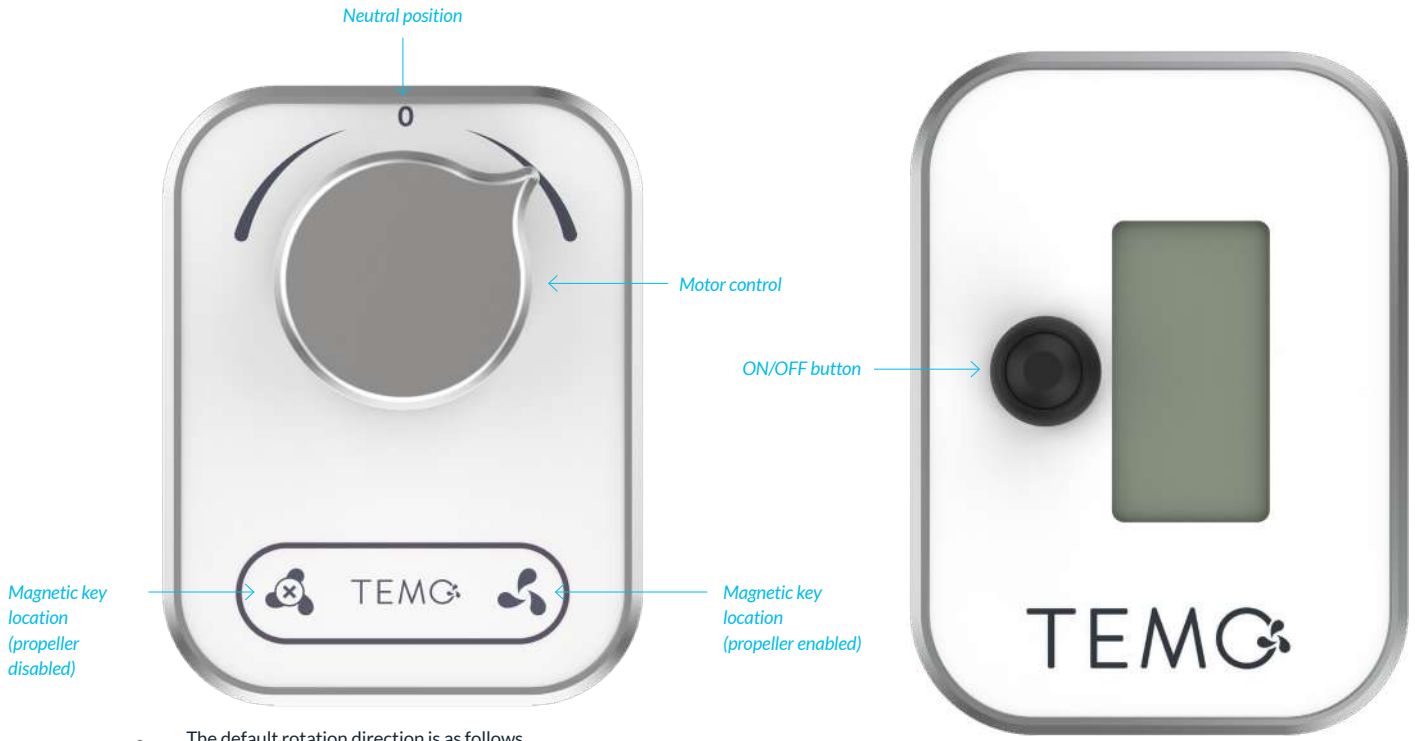

The default rotation direction is as follows
(an inversion option is available before leaving the workshop):



11. DISPLAY SCREEN

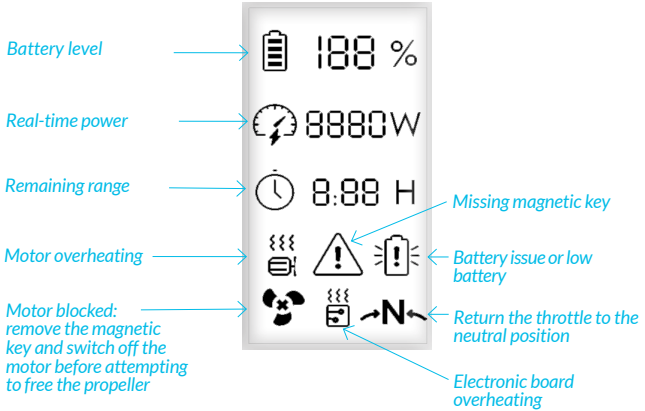



<u>If one of these indicators lights up, follow these instructions:</u> stop the motor. Check that the propeller is not obstructed. Allow the system to cool for 30 minutes.
If the problem persists, contact TEMO customer service.

12. PRECAUTIONS FOR USE

- Never leave children alone with TEMO systems.
- Never use TEMO systems if you are tired or under the influence of drugs, alcohol or medication.
- Never use TEMO systems in a swimming area or within 3 metres of any person swimming.
- Only operate TEMO systems when the propeller is in the water.
- Never attach TEMO systems to the user.
- The wearing of life jackets and safety equipment are mandatory.
- Store the battery at a temperature between 0° and 45°C.
- Recycle in compliance with current regulations.
- In the event of an impact on the battery compartment or on one of its edges, contact the TEMO customer service and stop using your TEMO systems.



- Warranty: 2 years + 1 additional year after registering the motors on our website (temofrance.com/pages/product-warranty-and-extensions), for non professional use.

This document is the quick start guide. To access all information about your motor (manual and templates), download the full User Manual at: www.temofrance.com/pages/doc-center.

Version: 06/26 - V1.0


SUI 1



TEMO
17 Rue Daniel Gilard 56000 Vannes
www.temofrance.com
Tel : +33 (0)9 70 70 38 80
E-mail : hello@temofrance.com

Non-contractual document