

ENG

TEMO

T700

QUICK GUIDE

Read before first use

1. PARTS INCLUDED

Package contents:

1. T700 motor
2. 594Wh Battery
3. Mounting bracket
4. Magnetic key with floating wrist strap
5. Charger

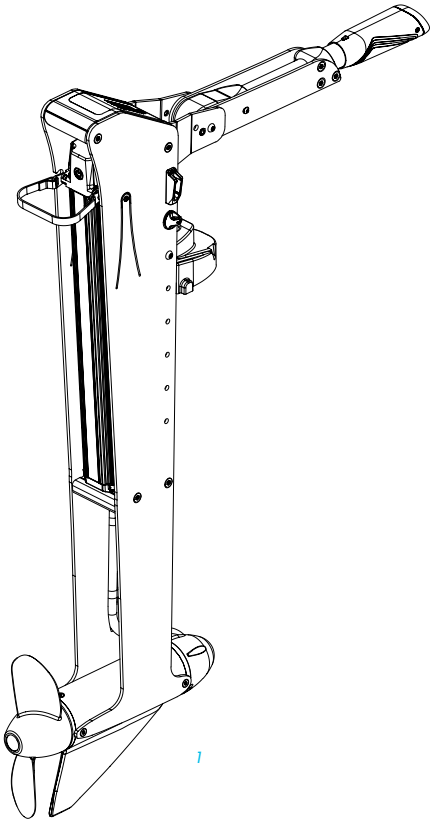

1

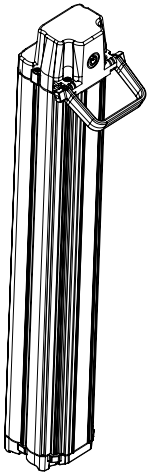

2

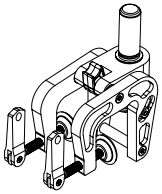

3

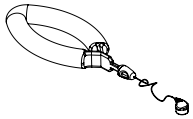

4

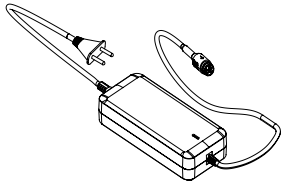

5

You can also find additional equipment on our website www.temofrance.com

2. INSTALLATION

MOUNTING BRACKET:
The mounting bracket must be secured to the transom of your boat using the mounting screws.

Insert the motor shaft into the mounting bracket until it reaches the stop.

To unlock the motor shaft from the mounting bracket, pull the release ring *(a)* while lifting the motor entire in the same motion as when inserting it.

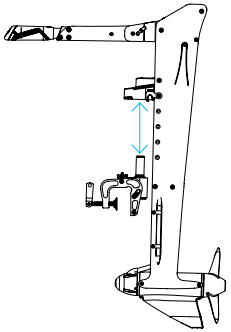

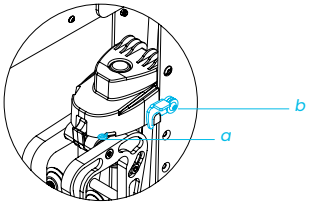

Before engaging reverse gear, make sure the lock is properly engaged *(b)*.

BATTERY:
Insert the battery using its handle until you hear the locking click.

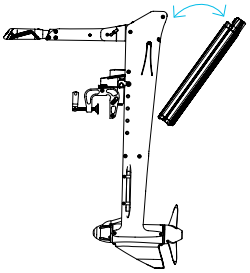

TILLER AND MOTOR LIFTING:

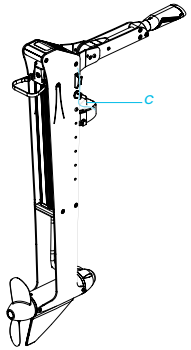

A rope is attached to one side of the T700 to raise it to the upper position and secure it using the cleat *(c)*.

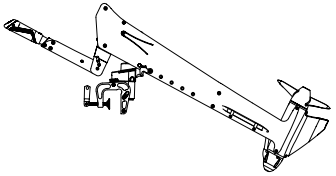

The motor is designed to allow up to 5 tiller positions. To change the position, remove the tool, select the desired tiller position, then reinsert the tool (d).

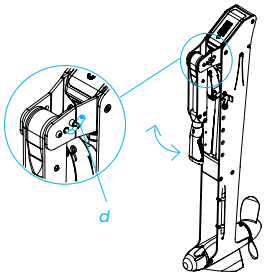

220V CHARGER:
Insert the charger connector into the battery connector, then plug the charger into a 220 V mains outlet.

The charger indicator light turns red when charging and turns green once the battery is fully charged.
The same connector is used for both charging and discharging.

Charge the battery in a moderate-temperature environment. Check the battery charge level every 3 months.

3. OPERATION

TRIM AND SHAFT HEIGHT ADJUSTMENT:
TEMO recommends a distance of 30 cm between the boat's waterline and the top of the propeller.

Adjust the motor shaft height *(e)* using the tool located on the tiller *(f)* (Torx key).
To adjust the motor's vertical position, use a 6 mm Allen key to adjust the trim *(g)*.

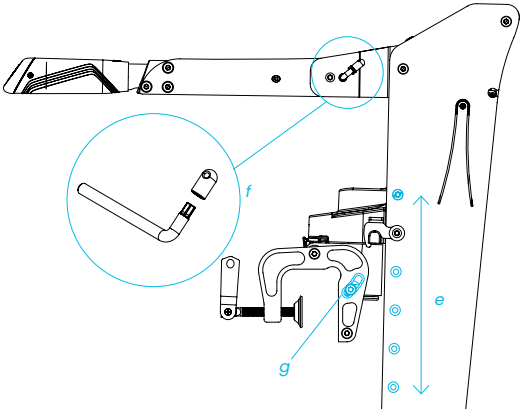

STARTING THE MOTOR:
Turn on the motor by pressing the ON/OFF button *(h)* on the display for 1 second. Wait 5 seconds for the electronics to initialize.

Place the magnetic key wrist strap around your wrist.
Insert the magnetic key into its slot *(i)*.

Turn the control handle to select forward or reverse.

Note: The motor cannot be started without the magnetic key.

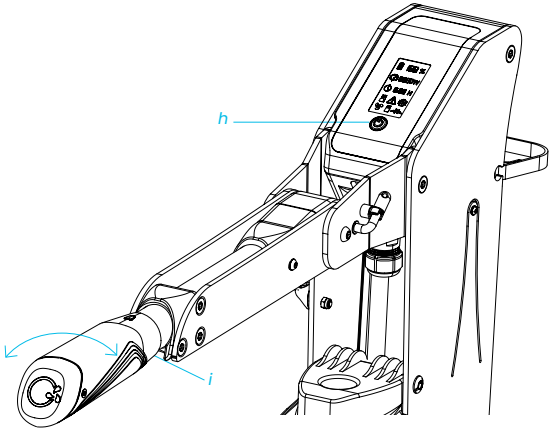

4. DISPLAY SCREEN

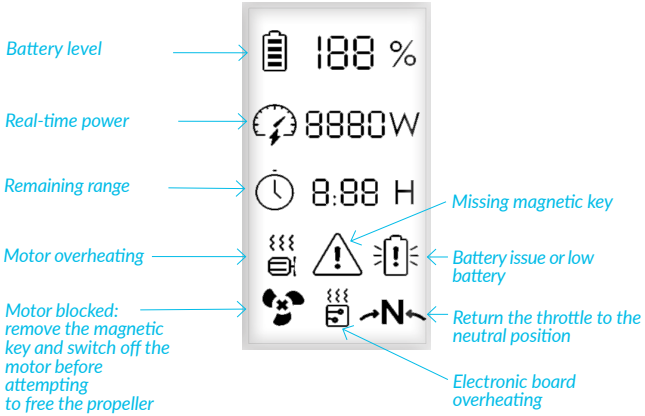



<u>If one of these indicators lights up, follow these instructions:</u> stop the motor. Check that the propeller is not obstructed. Allow the system to cool down for 30 minutes.
If the problem persists, contact TEMO customer service.

5. PRECAUTIONS FOR USE

- Never leave children alone with the T700.
- Never use the T700 if you are tired or under the influence of drugs, alcohol or medication.
- Never use it in a swimming area or within 3 metres of any person swimming.
- Operate the T700 only when the propeller is in the water.
- Never attach the T700 directly to the user.
- The wearing of life jackets and safety equipment are mandatory.
- Rinse with fresh water after each use.
- Store the battery at a temperature between 0° and 45°C.
- Recycle in compliance with current regulations.
- If the battery compartment or either end of the battery is impacted, contact TEMO Customer Service immediately and do not use the battery.
- Protection rating IP67.



- Warranty: 2 years + 1 additional year when the motor is registered on our website (temofrance.com/pages/product-warranty-and-extensions), excluding professional use.

This document is the Quick Start Guide.

Version : 09/26 - V1.0



TEMO
Head office : 6 rue Ella Maillart 56000 Vannes- France
Tel : +33 (0)9 70 70 38 80
E-mail : hello@temofrance.com

Non-contractual document